SNIPER RIFLE

★BBS: 6mm — BB弹为6mm
★SYSTEM: HOP-UP — 装置:HOP-UP调节钮
★VELOCITY: 278 FP/S, 85m/S — 速度: 278 FP/S, 85m/S
★POWER RANGE: 42 YDS, 50m — 力量范围: 42 YDS, 50m
★MAG CAPACITY: 37 RDS — 装弹量: 37 RDS

spring-operated model gun
弹簧操作模型枪

[ITEM FEATURES] :项目特征

★ METAL REAR SIGHT APERTURE.
金属后面视觉口
★ IT IS ADJUSTABLE IN 1/2 STEPS FOR ELEVATION AND WINDAGE.
在举起时可以调节1/2的偏差.
★ METAL OPERATING ROD
金属操作竿。
★ METAL BARREL
金属枪筒。

NO:M160-A1

NO:M160-A2

NO:M160-B1

NO:M160-B2

Only for 18 years old and up
只能18岁或
18岁以上才能使用

MADE IN CHINA

WARNING: Always read this manual before using.
警告：在使用之前必须读了这一本手册。

Only for 18 years old and up 只能18岁或 18岁以上才能使用	Operation of this air gun for competition use is restricted to users younger than 18 years old. 空气枪只限于18岁或18岁以上进行射击比赛的时候使用。
Injury caution 谨慎伤害	Since the field of fire can be about 50 to 60 meters, careless shooting may cause eye damage or other injuries. 射击的领域大约为50到60公尺，如果疏忽射击可能使眼睛遭受伤害或者别的伤害。
Careful reading of Handing cautions and Instruction manual 仔细谨慎阅读指导手册	Always read through this HANDLING CAUTIONS AND INSTRUCTION MANUAL carefully before operation. Operate the air gun with full recognition of warnings and cautions. 射击之前必须认真阅读操作过程和指导手册详尽的认识操作枪支。

WARNING ⚠ Always read through this manual before operation.

在任何情况下操作前必需读这一本手册

- Read through this manual before shooting, paying special attention to safe operation.
  在射击前读过这一本手册，要特别注意里面的安全操作步骤.
- Failing to do so may cause injury, accidents, or damage to the gun.
  没有按下面的要求操作可能造成伤害，或被枪意外弄伤.

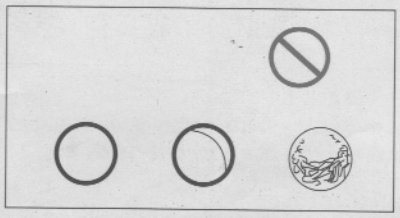

Always use precision BB Bullets for this air gun. Never use any used BB bullets.

空气枪要使用精密的BB子弹，不要用任何使用过的BB子弹。

Do not look directly into the gun barrel to avoid accidental discharge of BB bullets.

不要直接看枪膛内，避免被BB子弹意外射伤。

Never aim or shoot a person or animal as a target. Always set the selector on safety position except when you are ready to shoot a target.

不准对准人或动物作为目标进行射击，当你准备好射击的时候，应该把目标选择设置在安全的位置上。

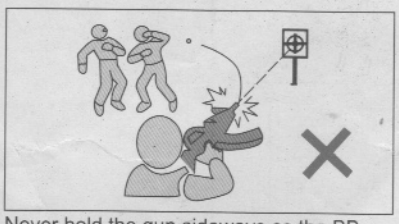

Never hold the gun sideways as the BB bullets will curve to the right or the left, due to the HOP-UP system.

由于HOP-UP系统的功能，不要将枪侧着射击。BB弹将会向左边或右边弯曲射出。

Do not brandish in public, do not alter the coloration and warnings-such an action is dangerous and may be a crime.

不要公然的挥舞枪支，不要改变着色和警告，这样的行为是很危险的可能导致犯罪。

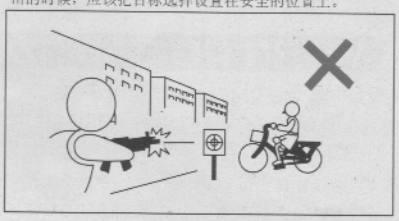

Select a safe place for operating the air gun, Avoid shooting in public area.

操作空气枪应该选择一个安全的地方，避免在公共场合射击。

Even when the magazine is released bullet may still remain in the gun. Before attaching the protective plug to the muzzle, please fire a few shoot to make sure no bullet remain in the gun.

当子弹夹被取下时子弹可能还滞留在枪中，当枪口塞住需要维护之前，请开枪射击确定没有子弹滞留在枪里面。

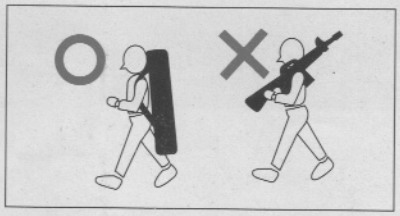

When you carry the air gun, attach the protective plug to the muzzle, set the selector lever to the safety position and put it in a case or bag.

当你携带空气枪的时候应该用安全的塞子将枪口堵住，然后把杆杠设置在安全的位置上，并且用袋子装起来。

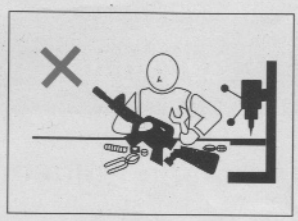

The dismantlement of the gun body would easily cause accident; which is really dangerous . So please don't dismantle the gun body.

枪身体的拆除会容易地引起意外事件；真的危险。所以请不拆除枪身体.

Component Chart
部件图表

1. Flash Suppressor
2. Suppressor Lock
3. Front Sight
4. Outer Barrel
5. Cylinder Plug
6. Front Swivel
7. Hand Guard
8. Hand Guard Rear Band
9. Magazine
10. Bolt Stop
11. Rear Sight
12. Safety Lever
13. Trigger
14. Rear Swivel
15. GUNSTOCK

1. 闪光抑制器
2. 锁住抑制器
3. 前面视域
4. 外部的枪筒
5. 枪筒塞子
6. 前面转环
7. 防护手的装置
8. 后面连接防护手的装置
9. 子弹夹
10. 门扣关闭
11. 后面视域
12. 安全杠杆
13. 扳机
14. 后面转环
15. 枪托

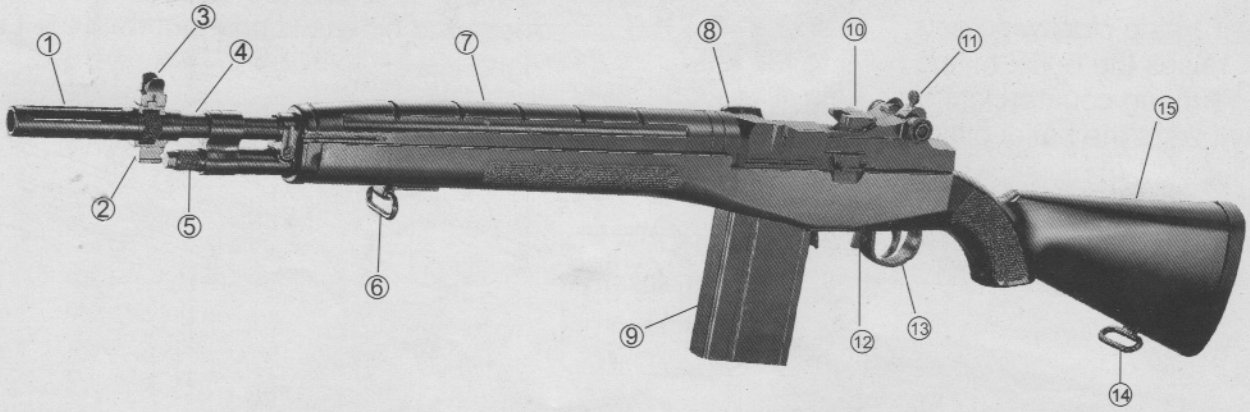

INSTALLATION SKETCH-MAP

安装示意图

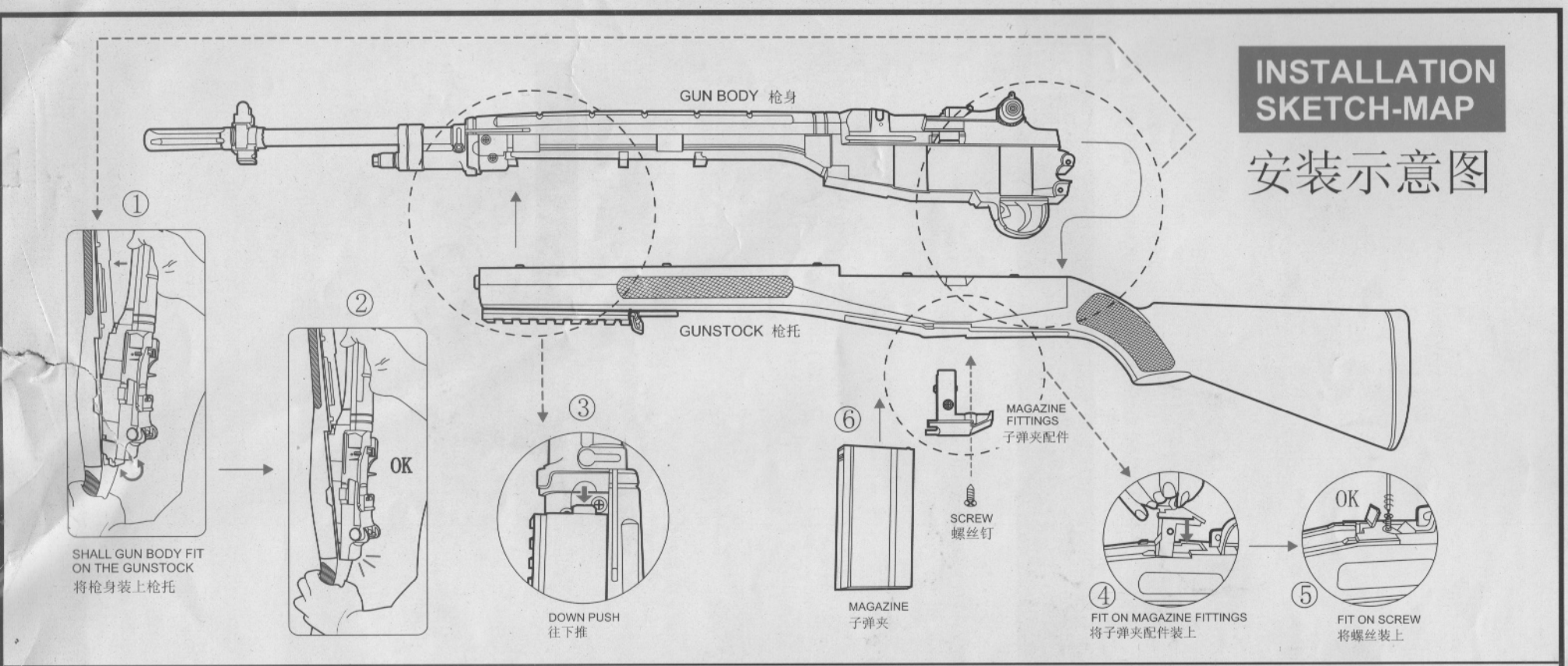

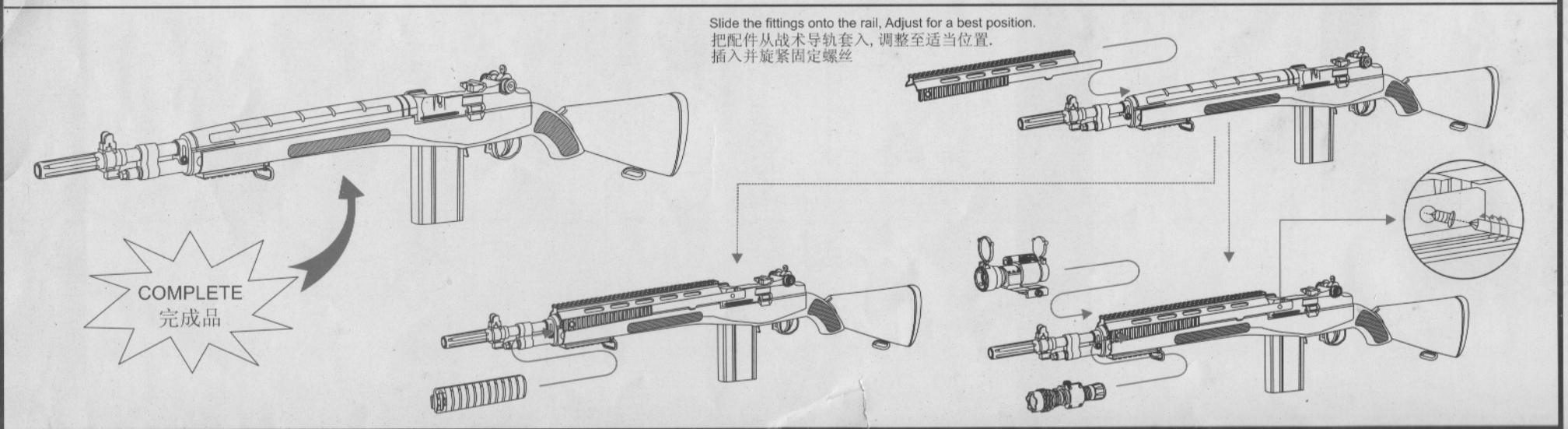

1 Loading BB Bullets to the Magazine, and setting the Magazine. 安装BB弹到子弹仓和子弹仓安装.

- Installation 安装
  Always set the magazine upwards. First. hook the hook in the front of the magazine and then press in the rear of the magazine till a sound of "kada" is heard.
  总是设定子弹夹向上的。 首先,钩住子弹夹的前面钩然后在子弹夹的后面中推进直到 "咔嚓" 的一种声音被听到。

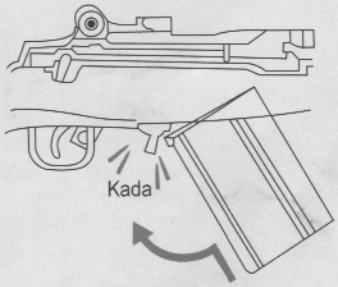

- Removing the magazine 卸下子弹夹。
  Press the magazine release lever to remove the magazine.
  推进子弹夹释放杠杆然后卸下子弹夹

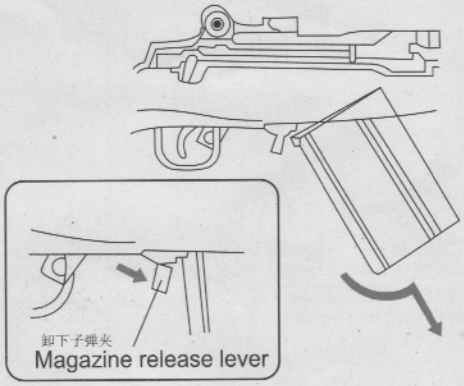

CAUTION 警告

Be sure that the safety lever is set to the Safety position and don't place your finger on the trigger except when you are ready for shooting.
当你准备射击的时候，要确定杠杆设置在安全的位置上，同时手指不要放置在扳机上。

- Load Bullets into Speed loader
  快速将子弹装到装载器里面。
  Open the Speed Loader Cap.
  Insert 6mm pellets into the Speed Loader.
  快速打开装载器的盖子，将6mm子弹快速装入装载器.
  Press the Rod Release Button to pull the Spring Rod to load the pellets into the magazine.
  按住弹簧竿的按钮，按下弹簧竿将子弹装进子弹夹。

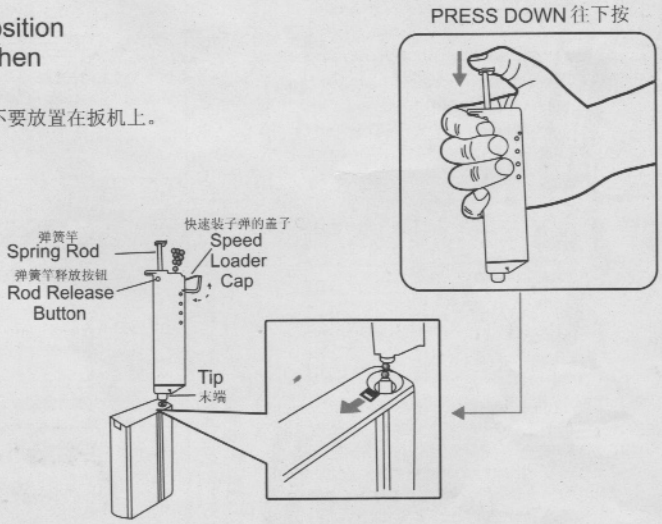

2 Movable Parts. 上膛部分

- The bolt retreats at the same time as putting the operating rod.
  门栓撤退同时同样把操作的竿放下。

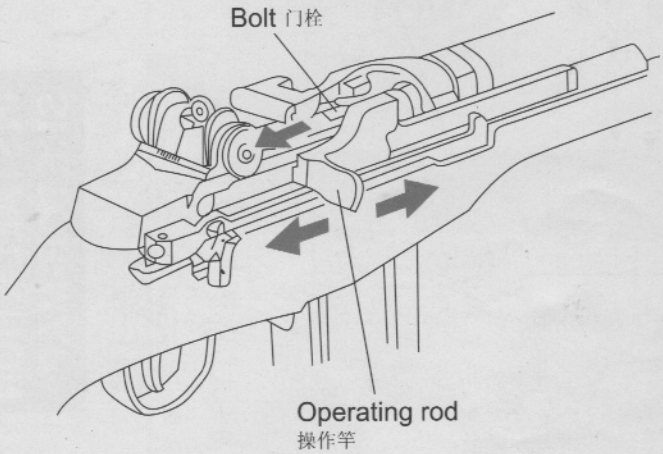

WARNING CAUTION 警告小心

Be careful not to put your finger in the bolt as it will close quickly when the operating rod is released.
小心不把你的手指放在门栓上，当操作竿被释放时，门栓将会快速关上。

3 Safety Setting. (Always set the safety lever to safe position before firing)
保险装置设定 (开火前总是将安全杠杆设定为的安全位置)

● SAFETY SETTING
保险装置设定

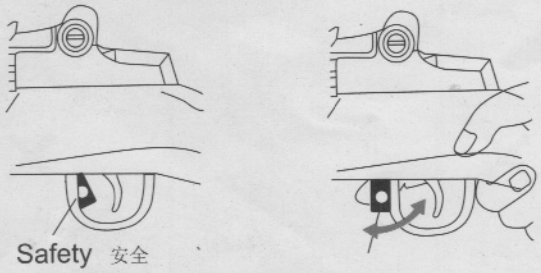

When you are not firing the gun or during storage. Always set the selector to the Safe position and attach the protective cap to the muzzle.
当你不进行射击或者储藏期间，应该用安全的塞子堵住枪口，并且把杆杠设置在安全的位置，然后装在袋子里面。

WARNING·CAUTION

Pulling the trigger with the Selector being set to safe position may damage the gun.
当射击时扳机设置在安全的位置时可能会损害枪

When the BB bullet fires, the safety lever is turned on even if the trigger is separated.
当准备射击BB弹的时候，安全杠杆被旋转在扳机之上。

The gun will fire when the trigger is pulled.
当扳机被拉时枪将开火

● SAFETY RELEASE
保险装置松开

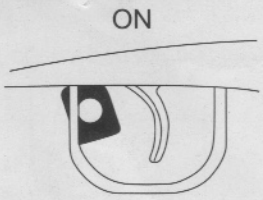

When the safety lever is set to this position, please don't pull the trigger otherwise may damage the gun.
当安全杆被设置到这位置，请别拉扳机不然那样可能损坏枪。

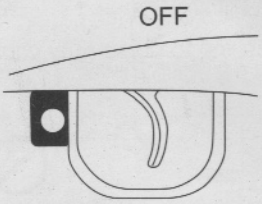

When the safety lever is set to this position, it is ready for shooting.
当安全杆被设置到这位置就好准备射击了.

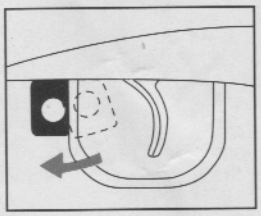

4 Setting the open sight 设定展开的视域

• Elevation adjustment 升高设定

Turning counterclockwise lowers the bullet hitting point.
反时针方向转动，子弹将瞄向低处打击。

Turning clockwise raises the bullet hitting point.
顺时针方向转动，子弹将瞄向高处打击。

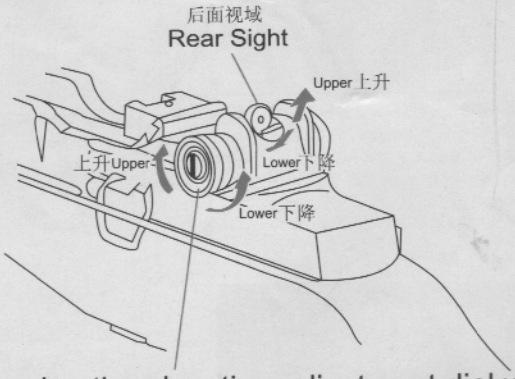

turning the elevation adjustment dial will move the bullet hitting point to the upper or lower. 转动调整刻度盘上面的标尺，移动子弹打击到上面或下面。

• Windage adjustment 瞄准器调整

Turning clockwise gets raises the bullet hitting point to the left.
Turning counterclockwise gets lowers the bullet hitting point to the right.
顺时针方向转动，子弹将瞄向左边。
反时针方向转动，子弹将瞄向右边。

turning the windage adjustment dial will move the bullet hitting point to the left or right. 调整瞄准器上面的刻度盘移动子弹打击对左边或右边。

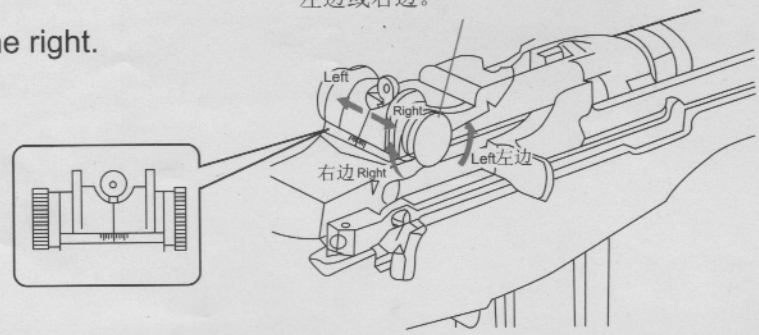

• How to aim.
该如何对准目标。

Look through from the front sight to the hole of the rear sight, and aim at the center of the target.
看前面的视域到后面视域的孔，并且瞄准目标的中心位置。

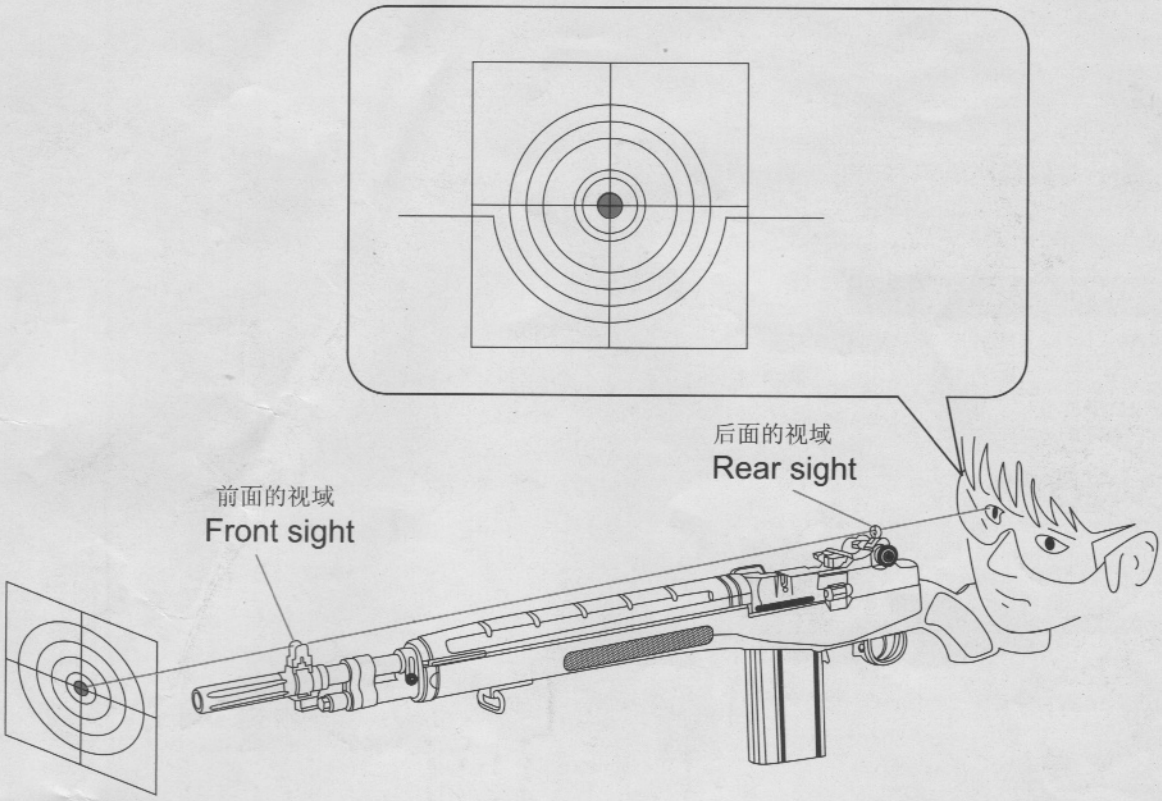

• How to hold.
该如何对准支撑。

Press the butt plate against slightly inside of the shoulder joint and put your cheek on the stock. Aim at the center of the target as shown in the above figure.
把枪托稍微压在膀关节里面并且把你的脸颊放在枪托上。瞄准镖靶上面的数字。

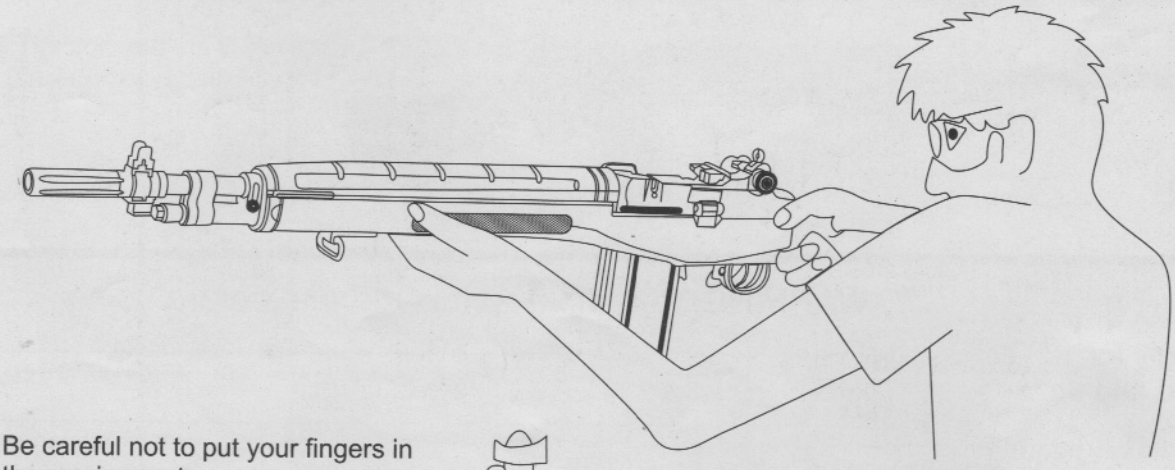

- Be careful not to put your fingers in the moving parts.
  小心不要把你的手放在移动的部分。